Square Fabric Pop Up Booths

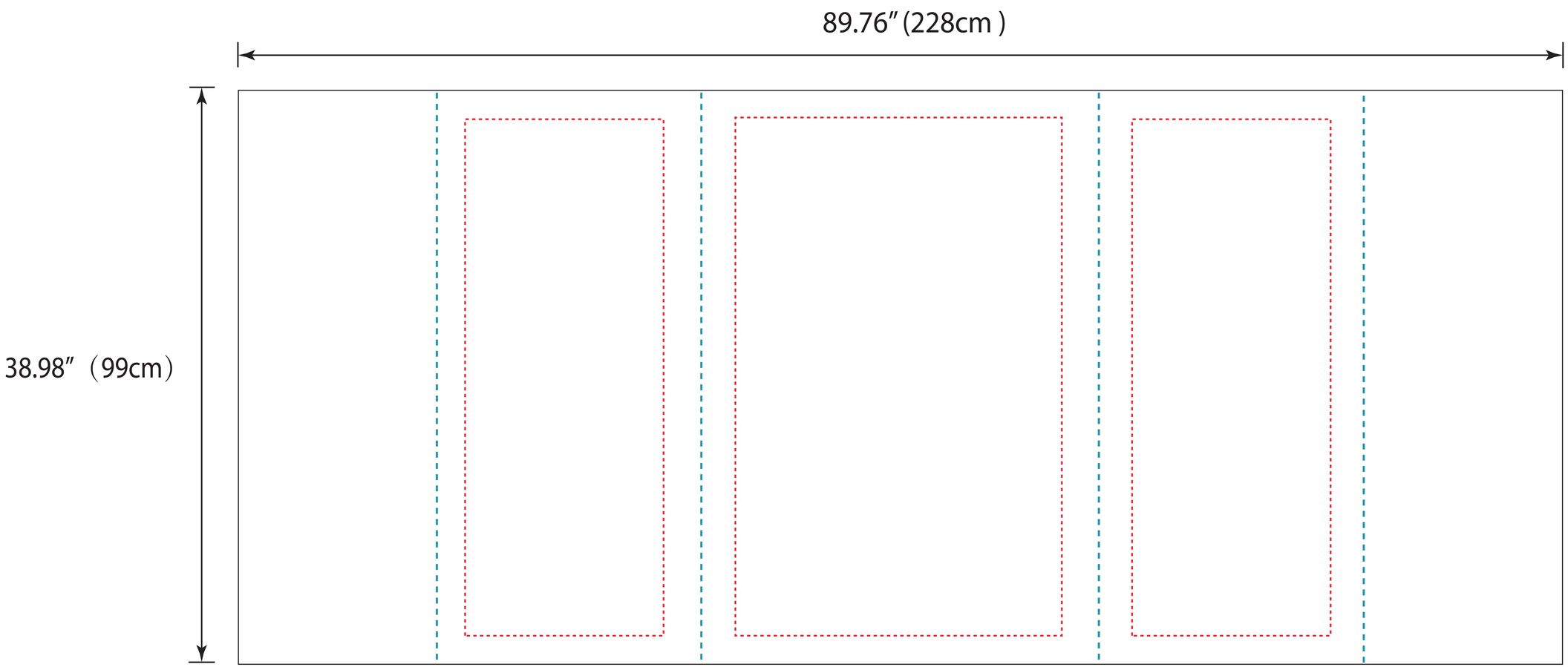

Front